OPEN ACCESS

University of BRISTOL

Filter considerations in the design of a software-defined radio

Author(s):
Macleod, JR; Beach, MA; Warr, PA; Nesimoglu, T

Published in:
IST Mobile Communications Summit, Barcelona, September

Link to publication record on the Bristol Research Portal:
Access record including PDF (if available)

Document version
Peer reviewed version

Citation for published version (Version of Record):
Macleod, JR., Beach, MA., Warr, PA., & Nesimoglu, T. (2001). Filter considerations in the design of a software-defined radio. In *IST Mobile Communications Summit, Barcelona, September* (pp. 363 - 368)
http://hdl.handle.net/1983/746

University of Bristol – Bristol Research Portal

Citing this paper
Guidance on citing material from the Bristol Research Portal is available under 'Manuscripts and Citations' in the Terms of Use (linked below).

Terms of Use
Full Terms of Use for the Bristol Research Portal are available online: https://www.bristol.ac.uk/research-enterprise-innovation/research-policy/pure/brp-terms/

Has this research benefited you?
Let us know how being able to access and read this research through the Bristol Research Portal has been meaningful to you by sharing your story at https://forms.office.com/e/ffL5CZ0fGT

Bristol Research Portal Coversheet last updated 16-Oct-2026

Download date: 24-Nov-2026

FILTER CONSIDERATIONS IN THE DESIGN OF A SOFTWARE-DEFINED RADIO

AUTHORS: J.R. MacLeod, M.A. Beach, P.A. Warr, T. Nesimoglu.

Centre For Communications Research, University of Bristol. [email: john.macleod@bristol.ac.uk]

Abstract: Analogue filter considerations are critical to the success of the hardware component of a Software Defined Radio. This paper sets out to show that the filtering requirements of a receiver and transmitter are very similar, and goes on to show that linearity issues are also of similar concern with both the transmitter and receiver. The paper then focuses on the image rejection requirements of an SDR receiver, and discusses filter techniques that can provide flexible image suppression. The paper concludes with a discussion of some simulation results for a proposed flexible filter design.

I. Introduction

In any radio receiver that employs superhetrodyne architecture, filters are required to perform three functions. First, they should band limit the signal to the frequency of interest. This function is often referred to as "channelisation" and is achieved, for preference, in base band area of the receiver. Second, filters are used to allow the image signal to be separated from the wanted signal. This function is performed at the first opportunity in the receiver chain. Third, filters should prevent nearby, but out of band "blocker" signals, from generating sufficient "in band" power to interfere with the wanted signal. It should be noted that if the receiver components were perfectly linear, then it would not be possible for out of band signals to generate inband products, and a filter to achieve this function, would not be needed. In practice, some non-linearity exists in all the amplifiers and mixers that make up the receiver chain. This means that some degree of bandwidth constriction needs to occur at a fairly early stage in the receiver.

II. Filter function within the receiver

The example of Figure 1 shows the effect of inserting a channelisation filter between the RF and the IF stages of the receiver. In this example, the blockers are assumed to be at a level of –25dBm, and the wanted signal at a level of –100dBm. If the LNA[1] has a gain of 20dB, and a TOI[2] of +40dBm, then the wanted signal will be amplified to a level of –80dBm, and the blockers will generate an "inband" distortion component of –95dBm. This leaves a SINAD[3] figure at the output of both LNAs at 5dB. A narrowband filter is now inserted in the right hand path of Figure 1. It is assumed that this filter has a sufficiently sharp cut off to prevent the blocking signals from reaching the non-linearity of the IF amplifier. No new distortion products are produced, and the SINAD at the output of the right-hand signal path is preserved at 5dB. The distortion output of the left-hand signal path is a combination of the distortion product of the LNA, amplified by the IF amplifier, plus the distortion product of the IF amplifier itself. This effect can be shown to be equivalent to an effective output TOI (TOI_{out}) given by:

$$TOI_{out} = \frac{1}{\frac{1}{TOI_{LNA}.G_{IF}} + \frac{1}{TOI_{IF}}}$$

[1] LNA = Low Noise Amplifier
[2] TOI = Third Order Intercept
[3] SINAD = Signal to Interference, Noise And Distortion ratio

Where: TOI_{LNA} =TOI of the LNA (Watts)
TOI_{IF} =TOI of the IF amplifier (Watts)
G_{IF} = power gain of the LNA (linear ratio)

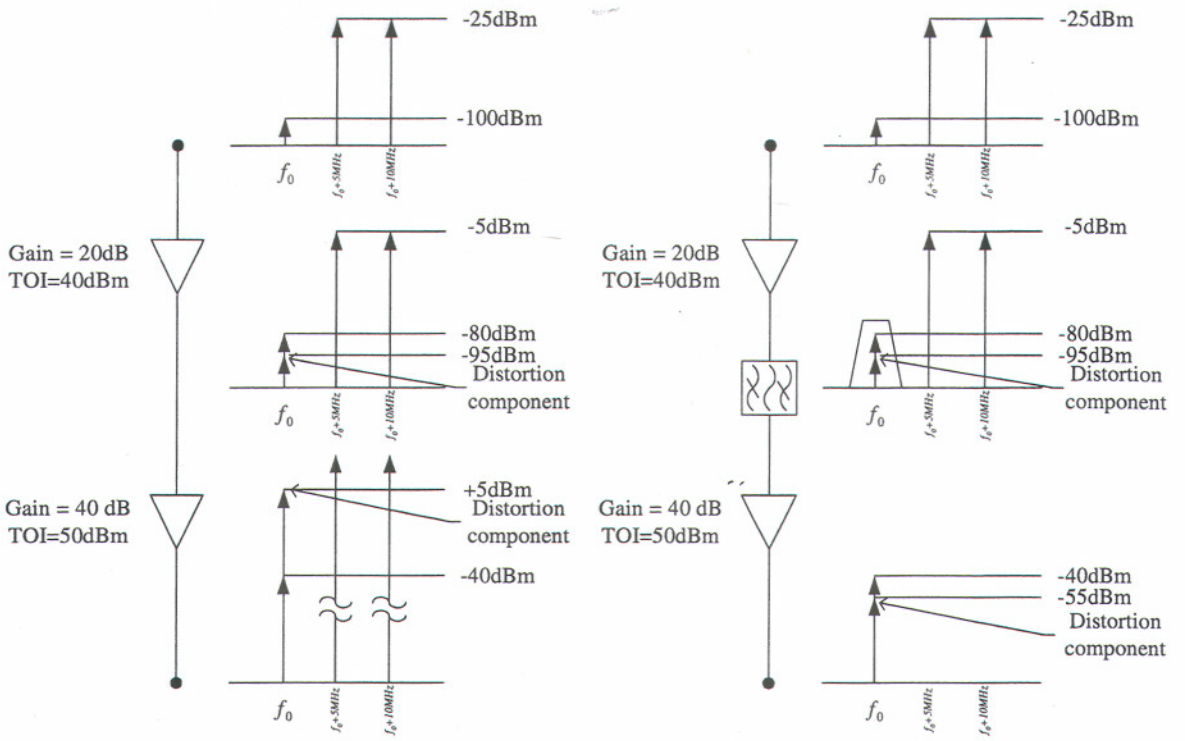

Figure 1 Example illustrating the mitigation of the effects of nearby blockers via the use of a channelisation filter high up in the RF chain

For the example given, the effective TOI is dominated by the final stage, and is close enough to +50dBm. This yields a distortion component of +5dBm, and a SINAD of –45dB, which would be unworkable. Note the TOI of the LNA is bigger than it needs to be for the signal path on the left-hand side of Figure 1, however, it is needed to achieve reasonable distortion performance for the example on the right-hand side.

III. Analogies with filtering functions within the Transmitter

Filtering is used to perform similar functions in the transmitter. The three filter functions performed by filters in the receiver, are also performed by filters in the transmitter. With the transmitter, a filter is required to define the channel, as in the receiver. A filter is also required to remove the unwanted outputs of the final upconversion. This is comparable to removing the image signal in the receiver. A filter is also required to prevent spurious or out of band emissions This is comparable to preventing blocking signals generating "in-band" interference, in the case of the receiver. Filters required to perform these various functions are placed at similar position in the receiver and transmitter chains.

IV. Frequency Translation Aspects

Discussion up to this point has ignored the fact that there is a frequency translation taking place between the LNA and the IF amplifier, and between the IF amplifier and the HPA[4]. This means that the mixer will also need to be "linear". Mixer linearity is always a crucial point in the design of any

[4] HPA = High Power Amplifier

transmitter or receiver chain. As part of their work on the TRUST project, the University of Bristol is studying innovative ways to improve mixer linearity.

The blocker filter, and the spurious output filter, will need to function at the IF frequency, and have variable bandwidth depending on the air interface standard in current use. To this end, a bank of switchable IF filters are used, in the current "proof of concept" demonstrator. It would be desirable, from the point of view of the transceiver behaving as an ideal SDR[5] transceiver, that this filter should be adaptable. The filter should have a bandwidth which is variable from 200kHz (GSM) to 20MHz (HIPERLAN/2). This means, if the filter is operating at a centre frequency of 160MHz[6], then it should exhibit a maximum Q of the order of 800, dropping to a minimum of about 8. It would be difficult to realise such a filter using conventional lumped components.

V. Image reject filter design

In this paper we will look at the design of image reject filters for the receiver, but, as pointed out previously, the same comments could be applied to the design of these filters for the transmitter.

The frequency range of wanted signals for the TRUST receiver could be represented graphically, as shown in the top line of Figure 2. The lower line shows an interpretation of this requirement in terms of the required coverage of image reject filters. It can be seen that if 4 filters are provided to pre-select the wanted signal, then only 2 of those filters need to be able to be swept. The table at the bottom of this diagram summarises the required specification of these filters. The bandwidth of the filter is assumed to be limited to about 5% of the filter centre frequency. This tends to be a reasonable figure when designing distributed component filters. Design and realisation get difficult when the filter bandwidth approaches 1%.

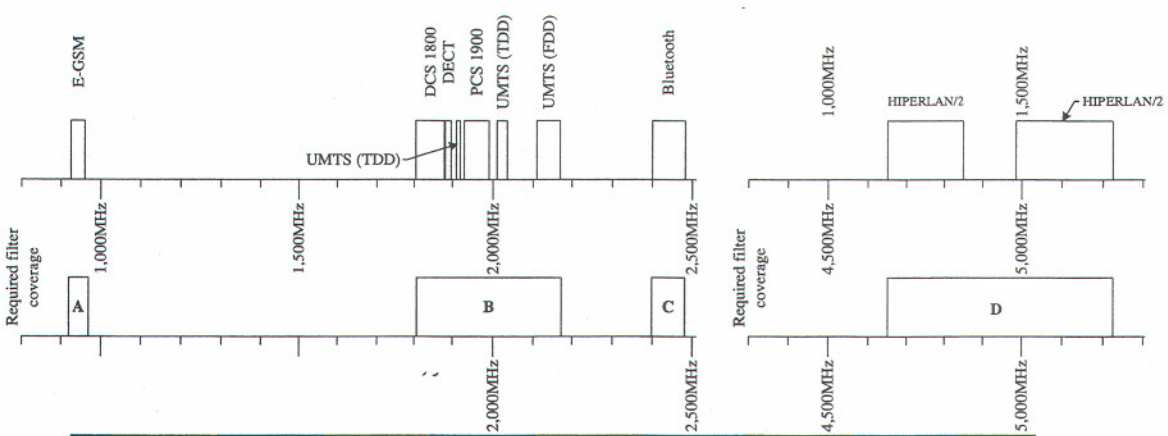

Filter	Filter Bandwidth (MHz)*	Lower end of coverage	Upper end of coverage	Sweep from	Sweep to	Effective centre frequency	Sweep as a percentage of centre frequency
A	50	935	960	fixed	fixed	947.5	0.0
B	100	1805	2170	1855	2120	1987.5	13.3
C	125	2400	2483.5	fixed	fixed	2441.8	0.0
D	300	5150	5725	5300	5575	5437.5	5.1

*Minimum set at approximately 5% of centre frequen

Figure 2 Frequency range of signals and consequent image filtering requirements

One possible arrangement for the variable filters is shown in Figure 3. It can be seen that a constant bandwidth filter is proposed (100MHz in the case of the lower frequency filter - Filter B, and 300MHz in the case of the HIPERLAN/2 filter - filter D). Filter B will be stepped through 4 steps to cover the

[5] SDR = Software Defined Radio

[6] 160MHz has been chosen as the IF frequency for the TRUST receiver for 2 reasons. Firstly it is high enough to allow image signals to be widely separated from wanted signals. Secondly, a major manufacturer of SAW filters has filters with the bandwidths of major European air interface standards (200kHz, 5MHz, and 20MHz) available "off the shelf".

UMTS, DCS1800, and DECT band, and filter D will be stepped through 3 steps to cover the HIPERLAN/2 band. This paper will now review possible techniques for realising these filters.

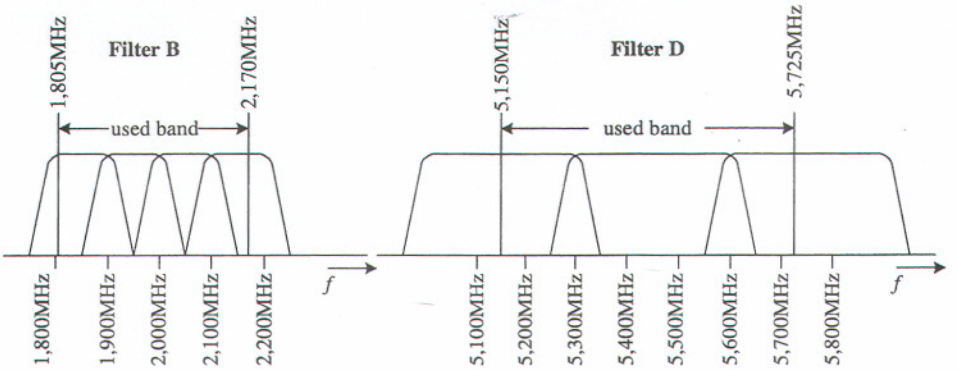

Figure 3 Proposals for sweepable image reject filtering

VI. Practical design of image reject filter.

Because this filter is operating at RF frequencies, the option for the design of a flexible preselect filter must be limited to realisation as, either a distributed component design, or as a MMIC.

There have been a number of variable MMIC[7] filter designs reported in the literature. In particular, a MMIC design reported by Katzin **[Katzin94]**. This design was produced as a prototype MMIC for the Hittite Corporation. Two versions were produced. Both exhibited a bandwidth of about 100MHz. One had a centre frequency that could be swept from 1,500 to 2,000MHz, and the other had a centre frequency that was sweepable from 1,980 to 2,650MHz. This filter would have been ideal for our application. The filter unfortunately never progressed past the prototype stage, due to problems with insufficient dynamic range **[Katzin01]**.

There are several classic types of distributed component microwave filter architecture that were developed in the late 50s or early 60s. Common examples of these architectures are: edge-coupled microstrip with open circuit or short circuit termination, interdigital microstrip, combline microstrip, and hairpin microstrip. All of these filter architectures are intended for a fixed centre frequency, fixed bandwidth application. The question remains as to how they might be adapted to be electronically tuned. A number of suggestions are listed below.

- Varactor diode tuning at some strategic point on the filter structure
- Constructing the filter on a substrate, whose dielectric constant could be electrically varied
- Switching parts of the transmission line so that the physical geometry of the filter structure could be varied.

Varactor diode tuning applied to combline filters has been investigated by Hunter **[Hunter82]**. Filter designs are reported in which the centre frequency can be swept from 3,200MHz to 4,800MHz with a bandwidth of about 200MHz. Reported insertion loss for such filter is of the order of 5dB. It is believed that this filter structure will exhibit distortion problems because of the frequency control is achieved through non-linear, varactor diodes.

It would be possible to sweep the filter characteristic by sweeping the effective dielectric constant of the substrate. As the electrical length of a transmission line is inversely proportional to the square root of the dielectric constant, this will cause the centre frequency of the filter to vary. The substrate would allow the dielectric constant to change, in response to variation in an electrical bias. Such a substrate

[7] MMIC = Monolithic Microwave Integrated Circuit.

material has been developed by a (UK) research laboratory. This technology has been subsequently sold on to a third party, and its future is uncertain.

Switching the component parts of a filter, in and out of circuit, using micro-miniature mechanical switches (MEMS) seems to offer a solution to this problem **[Loo00]**. The use of Electro-mechanical switches will mean that the filter is composed entirely of linear components and therefore dynamic range of the filter will not be an issue. The major problem with electrically switching a filter is to preserve the filter geometry as the centre frequency is translated, whilst at the same time utilising an essentially simple switching arrangement. Structures, such as edge coupled lines, or inter-digitated filters, exhibit changes in geometry, as lines are extended by switching.

At the time of writing, the simplest arrangement for altering the filter characteristic has been found to be the modified hairpin structure shown in Figure 4, **[Sagawa89]**, **[Martin99]**. This filter has a coupled line, which loads the top of the hairpin, and forms part of the filter resonator. Interstage transformer action is bought about by edge coupling of the "U shaped" structure. Tuning of this filter can be achieved by shortening the top loading coupled line as also shown in Figure 4.

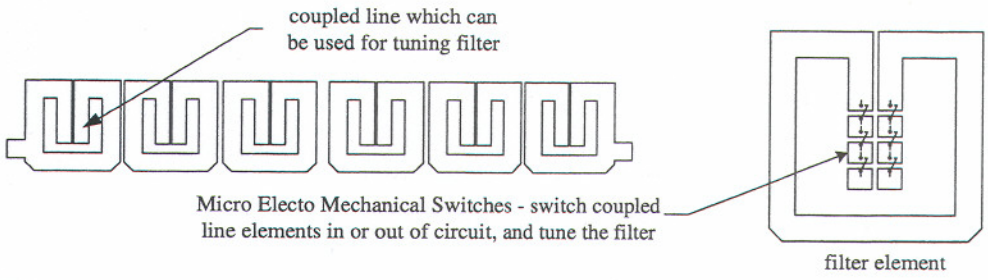

Figure 4 Modified hairpin filter structure.

A simple filter of this type has been simulated on ADS. The results are shown in Figure 5. It can be seen that the filter is sweeping as intended (Filter B - Figure 3) although, at the time of writing, the bandwidth is closer to 200MHz rather than our target 100MHz. This problem needs to be addressed, as it will severely affect our image rejection performance.

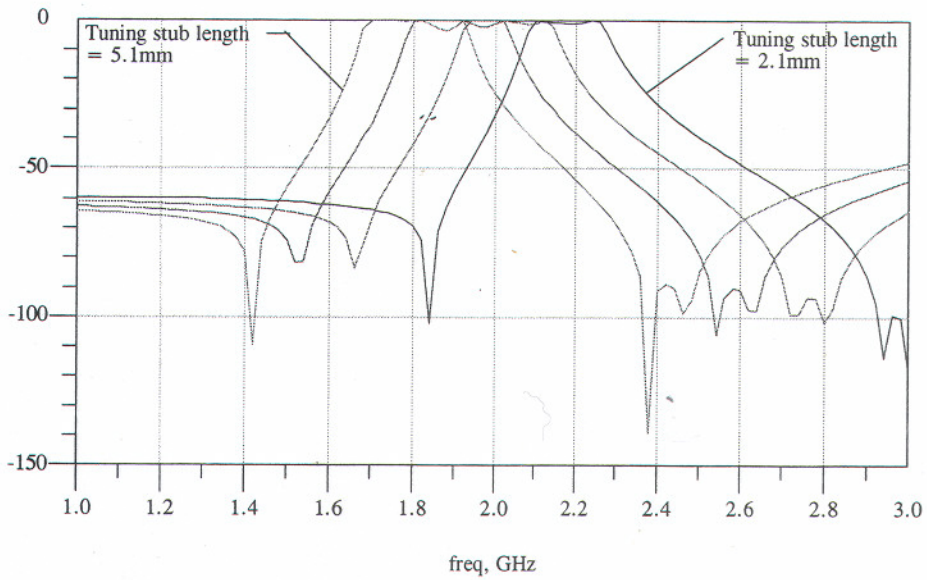

Figure 5 Simulated response of modified hairpin filter with tuning affected via altering the length of the top coupled line.

VII. Conclusion

Filtering and device linearity are important trade offs in the design of an SDR, that employs superhetrodyne architecture. In order to have linearity requirements, which are realisable, some form of channel constriction must occur at the IF, stage. This introduces a lack of flexibility, and detracts from the usefulness of the receiver as a true SDR receiver.

Image rejection is also an important issue with the design of superhetrodyne Software Defined Radios. Filter specifications have been proposed for a receiver designed to operate with the major European air interface standards. Adaptable filter structures have been proposed, using micro electro-mechanical switches, which will allow design of filters to meet these specifications. Some simulation results, for these proposals, have been presented.

VIII. Acknowledgement

This work has been performed in the framework of the IST project IST-1999-12070 TRUST, which is partly funded by the European Union. The authors would like to acknowledge the contributions of their colleagues from Siemens AG, France Télécom - CNET, Centre Suisse d'Electronique et de Microtechnique S.A., King's College London, Motorola Ltd., Panasonic European Laboratories GmbH, Telefonica Investigacion Y Desarrollo S.A. Unipersonal, Toshiba Research Europe Ltd., TTI Norte S.L., University of Southampton.

References

[Katzin94] P. Katzin, V.Aparin, "Active, Self Adjusting, L-S Band, MMIC Filter", *IEEE GaAs Symposium,* pp 41-43, 1994

[Katzin01] P Katzin "Personal correspondence", January 2001

[Hunter82] I.C. Hunter and J.D. Rhodes "Electronically Tuneable Microwave Bandpass Filters", *IEEE Transactions on Microwave Theory and Techniques*, Vol. MTT-30, No9, pp1354- 1360, September 1982

[Loo00] R. Y. Loo, G. Tangonan, D. Sivenpiper, J. Schaffner, T.Y. Hsu, H.P. Hsu, "Reconfigurable Antenna Elements using RF MEMS Switches", *Proceedings of ISAP2000*, pp 887- 890, Fukuoka, Japan, 2000

[Sagawa89] M Sagawa, K Takahashi, M Makimoto. "Miniaturised Hairpin Resonator Filters And Their Application To Receiver Front End MIC's", *IEEE Transactions on Microwave Theory and Techniques,* Vol. 37, No. 1`2, pp1991-1997, December 1989.

[Martin99] R. N. Martin, H Abdalla JR., "Techniques Yield Tiny Hairpin-Line Resonator Filters", Microwaves and RF, pp142-149, November 1999.