A Novel Mixer Linearisation Technique using Frequency Retranslation

T. Nesimoglu, M. A. Beach, J. R. MacLeod and P. A. Warr

Centre for Communications Research, University of Bristol,
University Walk, Bristol BS8 1TR, United Kingdom
Tel: +44 (0) 117 928 7738, email: T.Nesimoglu@Bristol.ac.uk

ABSTRACT

The inherent non-linearity of mixers in communication systems creates numerous undesired effects, which are particularly acute in broadband receiver design for software defined radio (SDR) applications. In this paper, previously investigated mixer linearisation techniques are summarised, and a new technique using *frequency retranslation* is presented. To the author's knowledge, this linearisation technique is new. Two-tone-test results show up to 33dB reduction in the distortion products and a π/4-DQPSK modulated carrier yield 22dB suppression of adjacent channel interference (ACI).

I. INTRODUCTION

Mixers are key components in communication systems for frequency translating signals. In receivers, mixers are used for downconverting the received radio frequency (RF) signal to baseband or to an intermediate frequency (IF) for further processing. In transmitters, mixers upconvert the baseband signal to IF or to RF for transmitting via an antenna. However, in practice they create numerous undesired effects (the explanations below are assuming a superheterodyne transceiver architecture, i.e. IF-RF and RF-IF translation respectively):

- In a transmitter: Creates intermodulation (IMD) and harmonic distortion (HD) at the RF output, spreading the spectrum to a wider bandwidth. The HD can be filtered out since it appears at one octave higher frequency than fundamental frequency, but this requires *appropriate filtering* at the RF output, whereas IMD cannot be removed by this means and creates ACI to other channels, and co-channel interference within the same channel.
- In a receiver: Also creates IMD and HD, but in particular a SDR receiver frontend 'sees' not only the wanted channel, but also a number of nearby signals. A non-linear mixer will downconvert all of these received channels together with the wanted channel to IF. During this frequency translation process *inband interference* caused by the nearby signals will be added to the wanted channel, making it more difficult or even impossible for the receiver to correctly detect the wanted signal. This places *demanding filtering* requirements on a broadband receiver frontend to reject the out-of-band unwanted channels (blockers) entering the mixer [1]. However, filtering-out strong interfering nearby channels is difficult, and thus a linear mixer is essential. Also, in a traditional radio application the frequency of transmission and reception will be fixed and the filter parameters will be set only for these known frequencies. However, this is incompatible with the SDR concept and filtering-out the blockers of multiple standards will be difficult, thus a linear mixer is highly desirable.

In order to reduce these problems, mixers are usually backed-off to operate in a more linear region. This reduces the dynamic range of the transceiver.

II. APPLICATION OF FEEDFORWARD LINEARISATION TO MIXERS

Before proposing the new mixer linearisation technique, previous techniques have been investigated and their suitability to TRUST (Transparently Reconfigurable Ubiquitous Terminal, i.e. SDR) receiver [2] frontend was studied. Feedforward has been previously applied to amplifiers [3] yielding significant reduction in IMD products at the output. Applying feedforward to mixers necessitates a different approach, since frequency translation occurs making the generation of the reference and error signals difficult. Considering a receiver, the reference (undistorted clean signal at RF input) and the output signals where the IMD products exist (at IF) are at different frequencies, and thus comparing them is not possible. Two feedforward linearisation architectures have been proposed for mixers within radio receiver applications, where the reference signal was frequency translated by a backed-off or a saturated secondary mixer. These are explained in the next sections.

A. Feedforward Mixer

In [4] the secondary mixer is backed-off to operate in its linear region, as shown in Fig.1. This mixer downconverts the reference signal to the same IF as the output of the main mixer ideally undistorted, but if such a mixer were available, it would no longer be necessary to linearise mixers. This signal when used as a reference is only an *approximation* to the required reference signal. The output of the main mixer, which includes

IMD is coupled and added in anti-phase to the output of the secondary mixer, thus cancelling the fundamental signals. This error signal is also an *approximation* to the required error signal, which is then recombined at the output combiner to suppress the IMD at the IF output. According to measured results from a similar prototype at the University of Bristol (UoB), the disadvantage of this architecture is that the signal-to-noise ratio (SNR) of the reference path is significantly reduced since it is operating at a much lower RF power. This adds noise to the main path when the error signal is combined at the output combiner to suppress the IMD, which would make the receiver less sensitive to the received signals, and also reduce the dynamic range of the receiver The practical results show 25dB third-order IMD (IM3) reduction at 70MHz of IF when the prototype was used as a downconverter with 500MHz of RF input and two-tone frequency separation (Δf) of 2MHz.

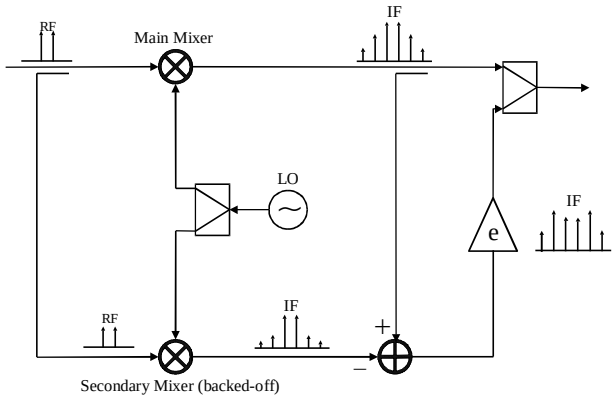

Figure 1: Feedforward error correction.

B. Single-Loop Feedforward

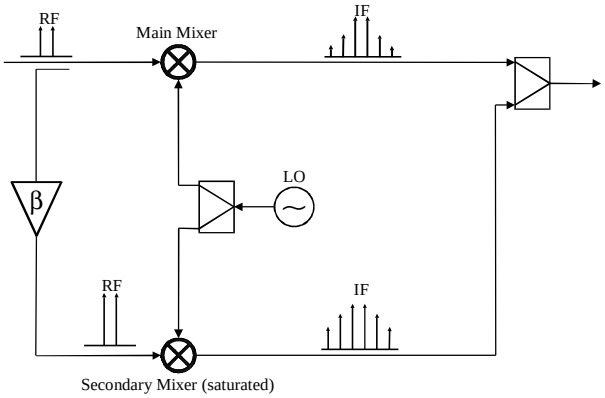

Figure 2: Single-loop feedforward.

The addition of noise to the final IF output was avoided with the configuration shown in Fig.2 [5]. Here, the secondary mixer is driven with a much higher RF signal than the main mixer to provide a high level of IMD which is also an *approximation* to the required error signal, also providing a high SNR. This error signal is amplitude and phase adjusted before being added to the final IF for suppressing the IMD. The investigations at UoB show that, this technique offers a low dynamic range. The performance is critically dependent on the amplitude matching of the IMD products and the mismatching characteristics of the two mixers. High levels of IM3 reduction can be obtained, about 30dB at a single operating frequency and signal level.

C. Summary of the Previous Techniques

Feedforward error correction shows impressive IMD suppression and the linearisation bandwidth can be improved by careful design or by compromising the linearisation performance. The major disadvantage is the reduction of SNR at the IF output, which would make the receiver less sensitive to the received signals. The single-loop feedforward architecture again shows an impressive IMD suppression and the linearisation bandwidth can be improved in the same way. The major disadvantage of this technique is the limited dynamic range because of its sensitivity to the gain errors between the two paths, and mismatching characteristics of the two mixers.

III. FREQUENCY RETRANSLATION FOR MIXER LINEARISATION

The novel receiver architecture [6, 7] in Fig.3 is proposed to overcome the shortcomings of previous techniques. The system will be explained considering a receiver application downconverting RF to IF. However, it can also be applied to a transmitter as shown in Fig.4.

A. System Description

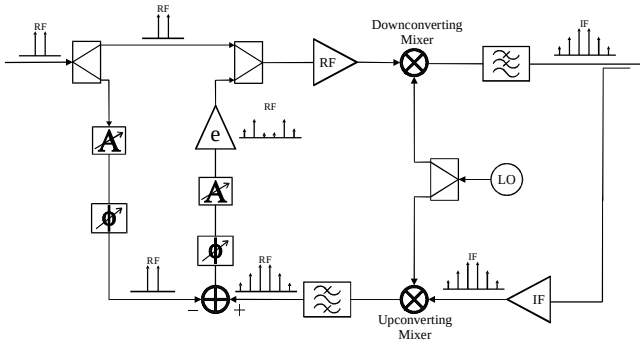

Figure 3: A receiver employing frequency retranslation.

The distorted output of the downconverting mixer at IF is coupled, amplified, *frequency retranslated* back to RF by the upconverting mixer and then filtered to remove the unwanted image signals. The clean (reference) signal at the receiver frontend is also coupled and added in anti-phase to the frequency retranslated IF output (which is now at RF) with correct amplitude. This process cancels the fundamental signals and produces an error signal including only the IMD products. This error signal is then combined with the received RF input signal with correct amplitude and phase relation to *predistort* the saturated downconverting mixer. This provides suppression of the IMD without affecting the fundamental signal level, if the signal cancellation is also correctly optimised. Also, the linearity of the second (upconverting) mixer is not so critical since it is not frequency translating the reference signal, but the already distorted IF output. Here, signal cancellation is the vector addition of the reference and frequency

retranslated IF output, with system performance critical on the optimisation of this parameter, in common with other feedforward linearisation architectures. Therefore, in a practical application an adaptive control scheme would be necessary in order to maintain system performance with changing circuit parameters.

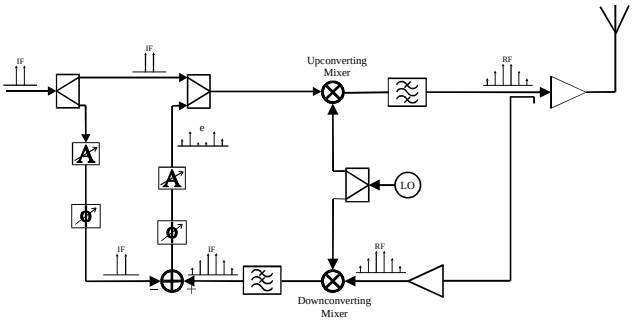

Figure 4: A transmitter employing frequency retranslation.

B. Practical Results and the Prototype

The picture of the constructed prototype is shown in Fig.5, where two passive double-balanced SRA-2000 Mini-Circuits mixers were used as the main components [8]. The RF amplifier preceding the downconverting mixer is a MAV-11 Mini-Circuits MMIC amplifier with a high 1dB-gain-compression point, thus driving the downconverting mixer to saturation without adding any additional distortion itself. This is to ensure that the technique is correcting the non-linearity of the mixer and not other circuit elements. The error (MAR-8) and IF (MAN-1LN) amplifiers provide sufficient gain at their operating frequencies to compensate for the losses such as coupling, power splitting/combining, filtering and the conversion losses of the mixers. Further, the error amplifier is also operating in its linear range, thus not distorting the error signal.

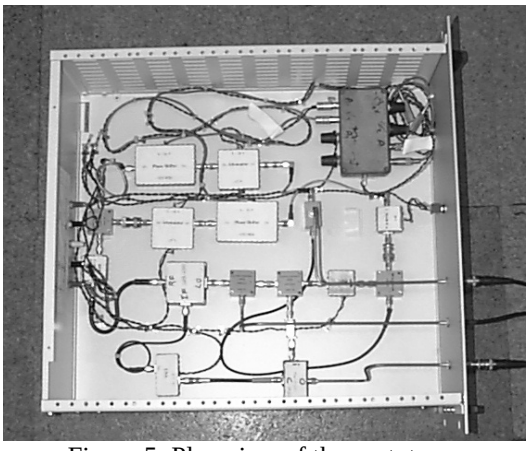

Figure 5: Plan view of the prototype.

A two-tone-test was applied at 920MHz with Δf=100kHz to provide a downconverted signal at an IF of 160MHz. The IF output of the downconverter with and without the technique applied is given in Fig.6, indicating an impressive 33dB suppression of IM3. Another amplitude and phase adjustment was performed to suppress IM3 to the same level of IM5 as shown in Fig.7, where the IM3 improvement is 25dB, i.e. the technique has increased the output third-order intercept (TOI) point of the mixer from –0.17dBm to 12.16dBm. The signal cancellation provides more than 40dB suppression of fundamentals. In order to obtain the error signal shown in Fig.8, the amplitude and phase match should be within 0.1dB and 1° respectively [3]. Noise power measurements at the IF output indicate only 0.2dB increase in the noise figure when the linearisation is applied, which is negligible. This illustrates that the technique does not degrade the noise performance of the receiver and by correct choice of components it can be further minimised. The same prototype was also tested with a TETRA π/4-DQPSK signal again downconverted from 920MHz to 160MHz, with Fig.9 showing a 22dB improvement in ACI.

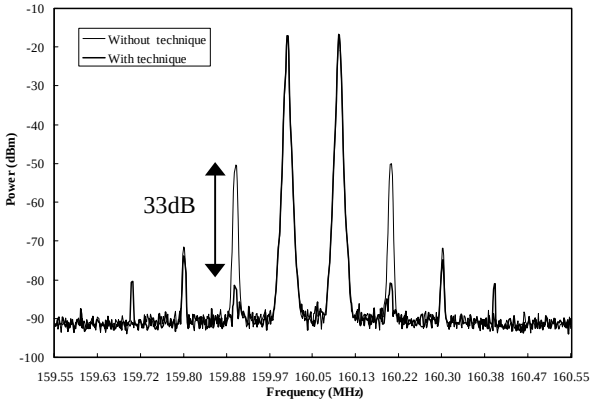

Figure 6: Measured two-tone-test showing a maximum 33dB suppression of IM3 with Δf=100kHz.

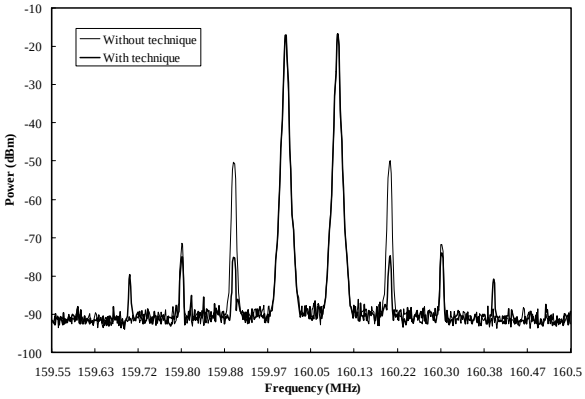

Figure 7: Compromise point showing 25dB suppression of IM3 with Δf=100kHz.

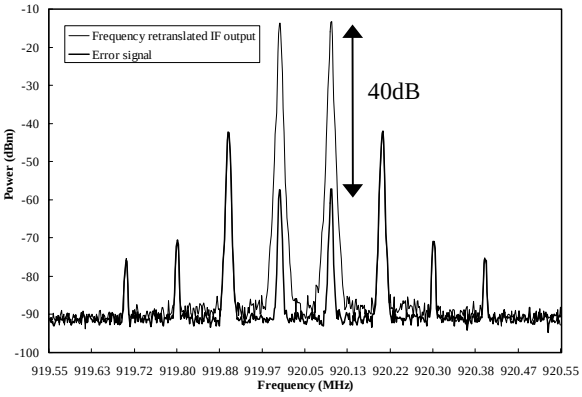

Figure 8: Signal cancellation with Δf=100kHz.

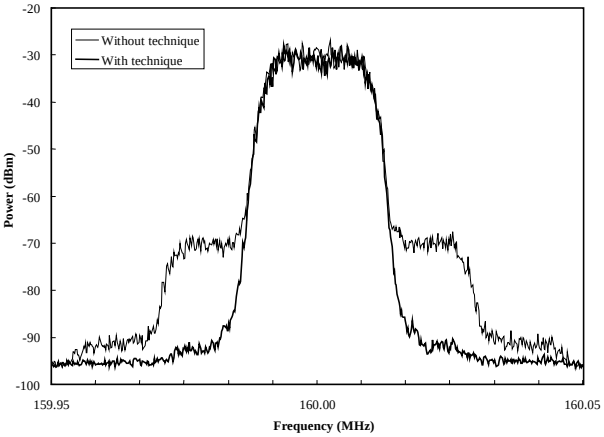

Figure 9: Measured π/4-DQPSK output spectrum showing 22dB suppression of ACI.

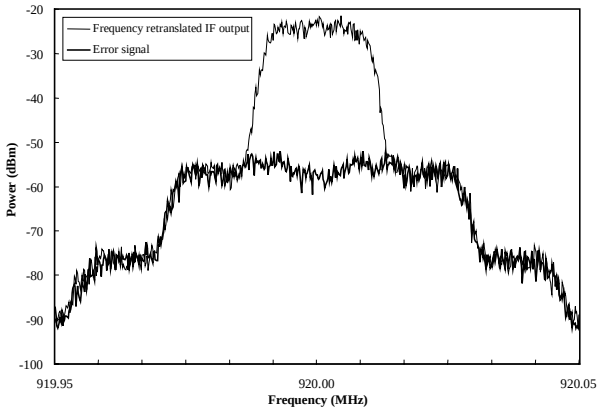

Figure 10: Signal cancellation with π/4-DQPSK.

A two-tone-test was also applied at 920MHz with a wider Δf=500kHz and the RF downconverted to an IF at 160MHz. After applying the proposed technique Fig.11 shows 19dB IM3 suppression. The error signal required to obtain this improvement is shown in Fig.12. Increasing the frequency separation degrades the signal cancellation and hence the IM3 suppression.

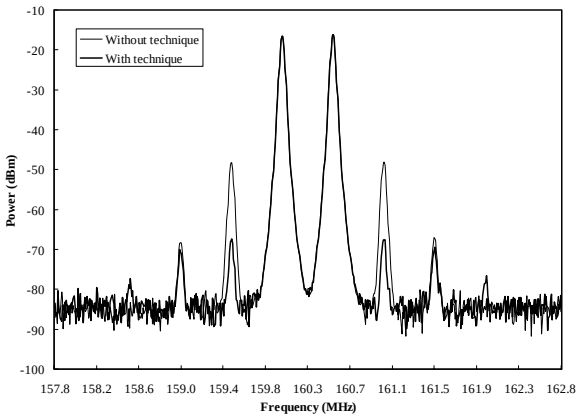

Figure 11: Two-tone-test showing 19dB suppression of *IM3* with Δf=500kHz.

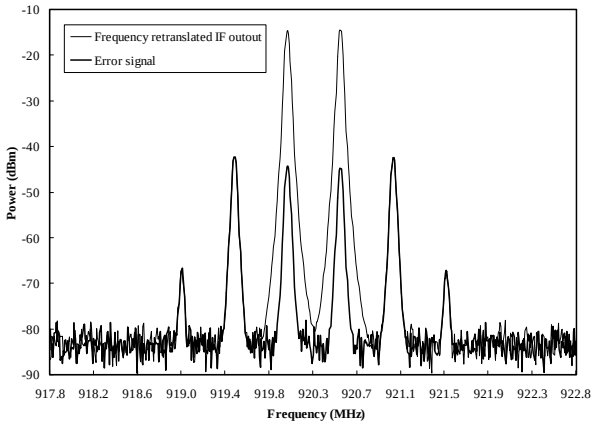

Figure 12: Signal cancellation with Δf=500kHz.

When the system was optimised for 920MHz with Δf=500kHz, the RF input frequency was changed by ±1.5MHz, i.e. to 918.5MHz and then to 921.5MHz without reoptimising the predistorting signals. This test can be an indication of the linearisation bandwidth of the system, and can show if the technique is capable of operating with a wideband signal. The output spectrums in Fig.13 and Fig.14 show that the technique can maintain 12dB of IM3 reduction even when it is optimised for a frequency at 1.5MHz offset. Degradation in the linearisation performance is expected since the technique is not adaptive to changing circuit characteristics and operating frequency. Due to the delay mismatch between the two paths in signal cancellation loop, it is not possible to maintain the required 180° phase difference for ideal cancellation at all frequencies. However, it is possible to match the phase at one frequency (in our prototype this is 920MHz), where the perfect cancellation will occur.

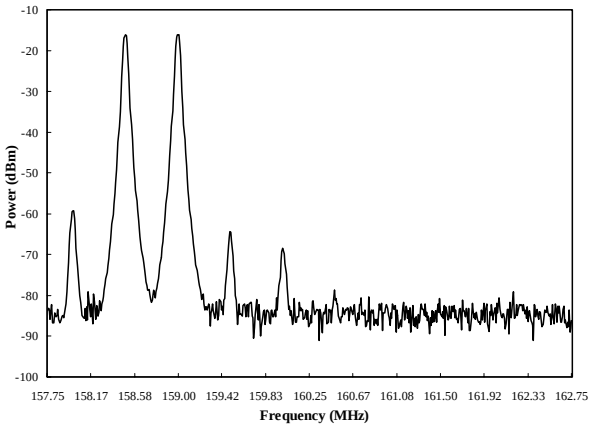

Figure 13: Two-tone-test optimised for 920MHz but tested at 918.5MHz.

As the signal frequency deviates from the centre frequency, the cancellation will degrade and reoptimisation for the new frequency will be required to maintain the perfect cancellation. This relationship is measured and shown in Fig.15. At the centre frequency the signal cancellation is at –88.3dB (Marker 1) and at 2.5MHz offset it reduces to –27.8dB (Marker 2).

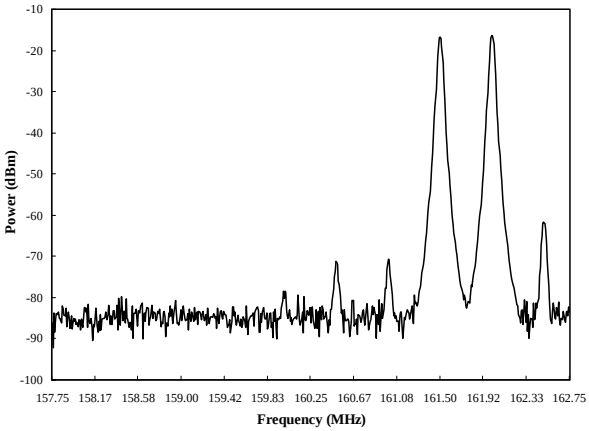

Figure 14: Two-tone-test optimised for 920MHz but tested at 921.5MHz.

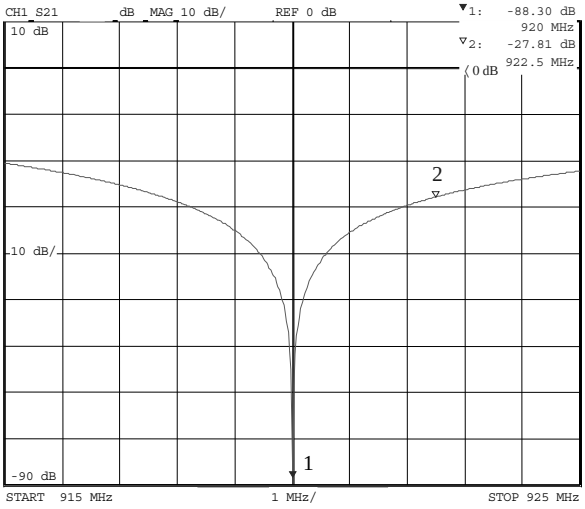

Figure 15: The signal cancellation degrading due to the delay mismatch as the signal frequency deviates from the centre frequency.

I.V. SUMMARY

A new mixer linearisation technique was proposed and an U.K. patent application has been filed [6]. The technique is practically tested and a hardware prototype is constructed, where it was demonstrated at the EU IST Summit (9th–12th September, Barcelona, Spain) on the IST-TRUST stand (see the picture).

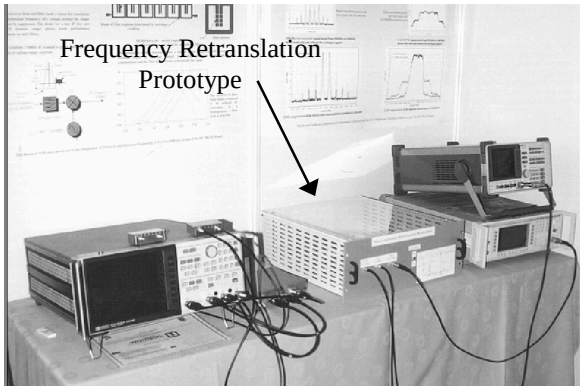

The technique provides considerable improvement of mixer non-linearity without compromising the SNR. It can suppress the IM3 by up to 33dB, with average suppression of 25dB being obtained. At this operating point, the calculations show that the output TOI point of the mixer has been increased from –0.17dBm to 12.16dBm. The tests with π/4-DQPSK modulated carrier has shown 22dB ACI improvement at the IF output. These are the initial results obtained from the prototype. The future work will focus on improving the linearisation bandwidth and dynamic range of the technique. Also, the current prototype is nonadaptive to changing circuit parameters and an adaptive control scheme will be necessary in a practical application.

V. ACKNOWLEDGEMENT

This paper is based upon work performed within the framework of the IST project IST-1999-12070 TRUST, partly funded by the European Union. The authors would like to acknowledge the contributions of their colleagues from Siemens AG, France Télécom - CNET, Centre Suisse d'Electronique et de Microtechnique S.A., King's College London, Motorola Ltd., Panasonic European Laboratories GmbH, Telefonica Investigacion Y Desarrollo S.A. Unipersonal, Toshiba Research Europe Ltd., TTI Norte S.L., University of Bristol, University of Southampton.

REFERENCES

[1] J. R. MacLeod, M. A. Beach, P. A. Warr and T. Nesimoglu, Filter Considerations in the Design of a Software-Defined Radio, IST Mobile Summit, September 2001, Barcelona, Spain.

[2] J. R. MacLeod, M. A. Beach, P. A. Warr and T. Nesimoglu, A Software Defined Radio Receiver Test-Bed, IEEE Vehicular Technology Conference, Atlantic City, October 2001.

[3] N. M. Pothecary, Feedforward linear power amplifiers, London, Artech House,1999.

[4] T. J. Ellis, Modified feed-forward technique for mixer linearization, IEEE MTT-S International Microwave Symposium Digest, v 3, 1998, Page(s): 1423-1426.

[5] M. Chongcheawchamnan and I. D. Robertson, Linearized microwave mixer using simplified feedforward technique, Electronics Letters, v 35, n 9, 1999, Page(s): 724-725.

[6] T. Nesimoglu and M. A. Beach, Linearised mixer using frequency retranslation, UK Patent Application No. 0117801.1, 20th July 2001.

[7] T. Nesimoglu, M. A. Beach, P. A. Warr and J. R. MacLeod, Linearised Mixer using Frequency Retranslation, IEE Electronics Letters, December 2001, Vol. 37, No. 25, Page(s): 1493-1494.

[8] http://www.mini-circuits.com